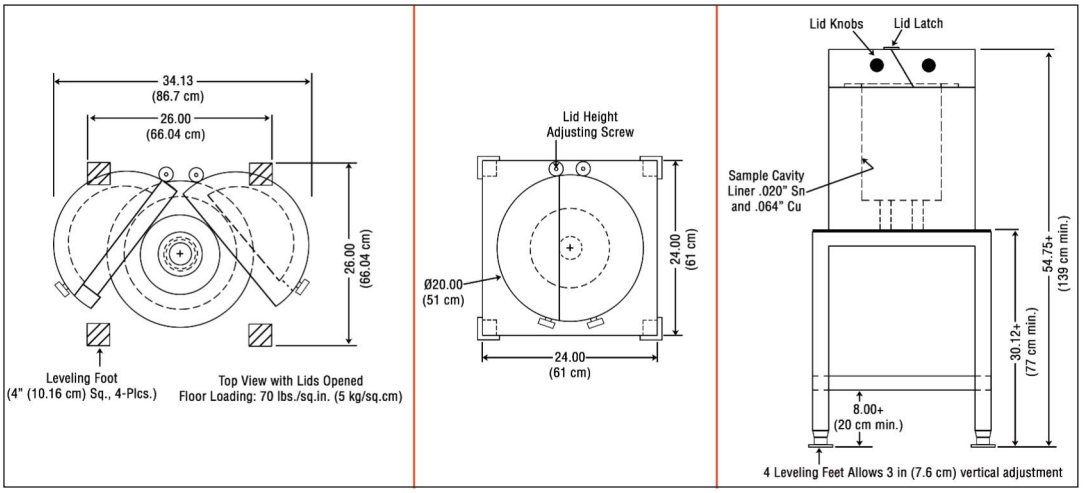HPLBS Series